soundmaster®

TR - 40

2-BAND PORTABLE RADIO
2-BAND TRAGBARES RADIO
RADIO PORTATIF À 2 BANDES
2-BAND RADIO
NEŠIOJAMI BANGŲ RADIOJO
PORTATIIVSED LAINEALA RAADIO
PORTABLE AM/FM RADIO RADIJAS
RADIO PORTABLE CON 2 BANDAS

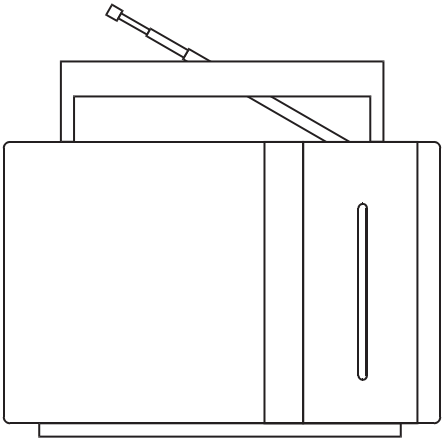

OPERATING INSTRUCTIONS
BEDIENUNGSANLEITUNG
MODE D'EMPLOI
GEBRUIKSAANWIJZING
NAUDOJIMO INSTRUKCIJA
KASUTUSJUHEND
EKSPLUATĀCIJAS INSTRUKCIJAS
MANUAL D'INSTRUCCIONES

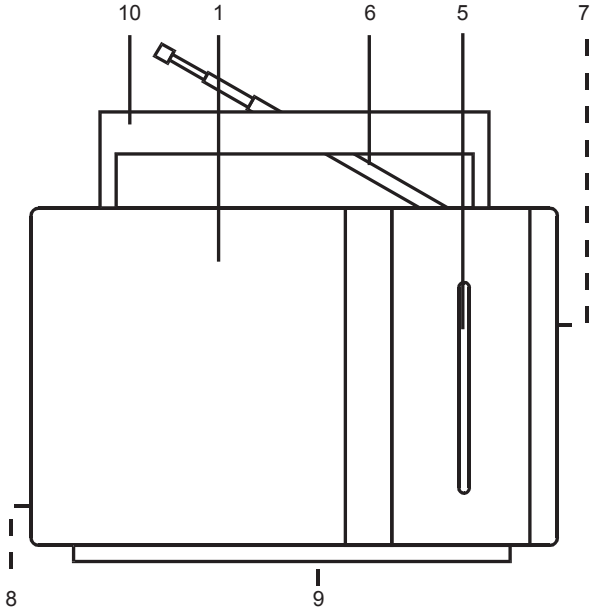
10
1
6
5
7
8
9

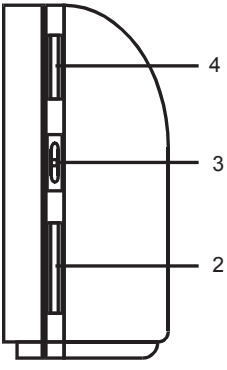
4
3
2

CAUTION

RISK OF ELECTRIC SHOCK
DO NOT OPEN

ATTENTION
To reduce the risk of electric shock, do not remove the cover. There are no user serviceable parts inside the unit. Refer all servicing to qualified personnel.

The lightening flash with arrowhead symbol within the triangle is a warning sign alerting the user of "dangerous voltage" inside the unit.

The exclamation point within the triangle is a warning sign alerting the user of important instructions accompanying the product.

WARNING
To reduce the risk of fire or electric shock, do not expose this appliance to rain or moisture.

IMPORTANT
DO NOT THROW BATTERIES IN FIRE !
THE APPARATUS SHALL NOT BE EXPOSED TO DRIPPING OR SPLASHING.

ENSURE A MINIMUM DISTANCE OF 5 CM AROUND THE APPARATUS FOR SUFFICIENT VENTILATION.

ENSURE THAT THE VENTILATION IS NOT IMPEDED BY COVERING THE VENTILATION OPENINGS WITH ITEMS, SUCH AS NEWSPAPERS, TABLE-CLOTHS, CURTAINS, ETC..

DO NOT PLACE NAKED FLAME SOURCES, SUCH AS LIGHTED CANDLES ON THE APPARATUS.
TAKE ATTENTION TO THE ENVIRONMENTAL ASPECTS OF BATTERY DISPOSAL.
USE THE APPARATUS ONLY IN MODERATE CLIMATES (NOT IN TROPICAL CLIMATES).
DO NOT EXPOSE THE APPARATUS TO DRIPPING OR SPLASHING.
DO NOT PLACE OBJECTS FILLED WITH LIQUIDS, SUCH AS VASES, ON THE APPARATUS.

The mains plug shall remain readily operable.
In case of malfunction due to electrostatic discharge, the apparatus has to be reset by disconnecting it from mains supply.

R168-soundmaster-8LANG 105x148.i3 3 2010/4/16 03:50:32

LOCATION OF CONTROLS

1. Speaker
2. Volume control and Power ON/OFF
3. Band selector switch
4. Tuning knob
5. Dial scale
6. Telescopic antenna
7. Phone jack
8. AC socket
9. Battery compartment
10. Handle

POWER SUPPLY

1. To operate the set on AC power, insert one end of the AC power cord into the AC socket (8) on the unit and the other end into a convenient standard AC outlet.
2. To use batteries, insert 4 pieces of 1.5V D/R20/Mono size batteries into the battery compartment (9) at the back of the unit, making sure that the battery is connected correctly.
   The battery supply will be switched off when the set is connected to the AC power.

SET OPERATION

1. Switch on the set by rotating the Volume control/PowerON/OFF knob (2) counter clock-wise. Adjust the volume to a comfortable listening level.
2. Set the Band selector switch (3) to the desired radio band (FM or AM).
3. Turn the tuning knob (4) until the desired station is heard.
4. To turn off the radio , rotate the knob (2) clockwise until a slight click is heard.

TELESCOPIC ANTENNA

1. For FM reception, extend the telescopic rod antenna (6) to its full length, adjust the direction and angle for best reception.
2. For AM reception , the unit is incorporated with a built-in ferrite bar antenna. Since the ferrite bar antenna is directional, rotate the set and position it for best AM reception.

PHONE JACK

For private listening,connect the earphone or headphone with 3.5mm plug to the phone jack (7). The built-in speaker is automatically disconnected.

SPECIFICATIONS

Frequency range:	FM 87.5 - 108 MHz AM 540 - 1600 kHz
Antenna:	FM - Telescopic rod antenna AM - Built-in ferrite bar antenna
Speaker:	3 inch 8 Ohm dynamic speaker
Output power:	1 Watt R.M.S.
Phone jack:	3.5 mm
Dimension:	250(L) x 62(W) x 150(H) mm
Power sources:	DC 6V 4 x D/R20/Mono size AC 230V ~ 50 Hz

R168-soundmaster-8LANG 105x148.i4 4 2010/4/16 03:50:32