soundmaster ®

Modell Disc-3600USB

Bitte vor Inbetriebnahme sorgfälltig lessen.

Read instructions carefully before using the unit.

Avant de metre en service votre appareil, lisez attentivement ce instructions

HINWEISE ZUM UMWELTSCHUTZ

Dieses Produkt darf am Ende seiner Lebensdauer nicht über den normalen Haushaltsabfall entsorgt werden, sondern muss an einem Sammelpunkt für das Recycling von elektrischen und elektronischen Geräten abgegeben werden. Das Symbol auf dem Produkt, in der Gebrauchsanleitung oder auf der Verpackung weist darauf hin.

Die Werkstoffe sind gemäß ihrer Kennzeichnung wiederverwertbar. Mit der Wiederverwendung, der stofflichen Verwertung oder anderen Formen der Verwertung von Altgeräten, leisten Sie einen wichtigen Beitrag zum Schutze unserer Umwelt.

Bitte fragen Sie bei Ihrer Gemeindeverwaltung nach der zuständigen Entsorgungsstelle.

Sicherheits- / Umwelt- / Aufstellhinweise

Das Gerät ausnahmslos nur in trockenen Innenräumen betreiben.
Niemals mit Feuchtigkeit in Verbindung bringen
Niemals das Gerät öffnen. ***STROMSCHLAGGEFAHR !*** Dies ist nur Fachpersonal gestattet.
Bei Gewitter, Netzstecker sofort aus der Steckdose entfernen.
Bei Beschädigung des Netzkabels, Netzstecker sofort ziehen und eine Fachwerkstatt aufsuchen.
Kinder sollten das Gerät nur unter Aufsicht Erwachsener betreiben.
Das Gerät ausnahmslos nur mit einem trockenen Tuch reinigen. KEINE REINIGUNGSMITTEL !!!
Das Gerät keiner Sonnenbestrahlung oder anderen Hitzequellen aussetzten.
Das Gerät an einem sicheren, erschütterungsfreien Platz aufstellen.
Rund um das Gerät min. 10cm Entlüftungsraum auf jeder Seite frei halten, so das die bei Betrieb entstehende Warmluft ungehindert abziehen kann
Gerät möglichst weit entfernt von Computern und Mikrowellengeräten platzieren, da es sonst evtl. zu Empfangsstörungen im Radiobetrieb kommen kann.
Verwenden Sie nur Batterien für die Fernbedienung, die frei von Quecksilber & Cadmium sind.
Verbrauchte Batterien sind Sonderabfall und gehören NICHT in den Hausmüll !! Geben Sie diese Ihrem Händler zurück oder entsorgen Sie diese an geeigneten Sammelstellen Ihrer Stadt oder Gemeinde.
Bei Beschädigung des Netzkabels/Netzsteckers, vorsichtig das Gerät vom Stromnetz nehmen und umgehende eine Fachwerkstatt aufsuchen.

Technik

UKW / FM Frequenz	87,5 – 108MHz +/- 0,5MHz
MW / AM Frequenz	515 – 1640KHz +/- 20KHz
Leistungsaufnahme	23 W (Stand-by 11W)
Max Musikspitzenleistung	2 x 50W P.M.P.O
Netzbetrieb	AC 230V 50Hz
USB	2.0
Encoding	128kbps

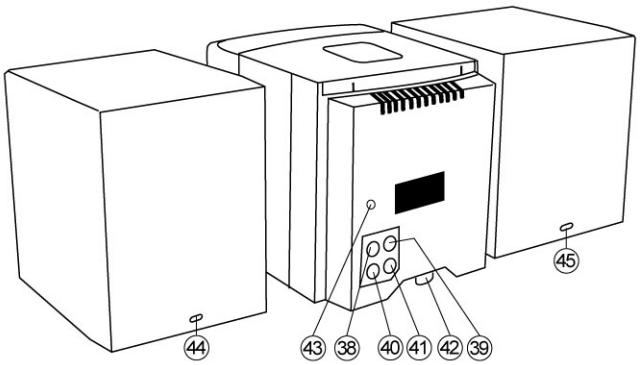

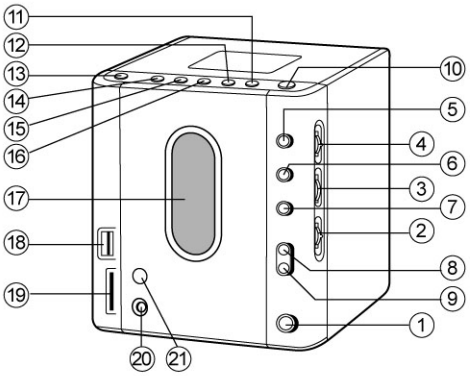

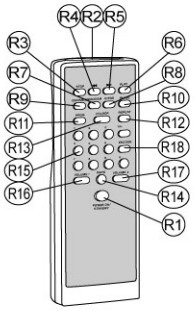

BOTTOM OF MAIN UNIT

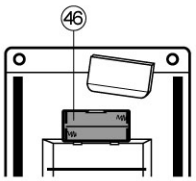

SIGN IN DISPLAY WINDOW

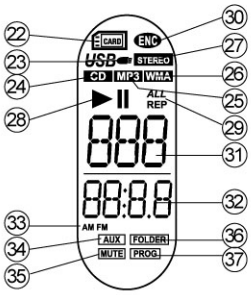

CONTROL LOCATION

FRONT VIEW:

1. POWER ON / STANDBY BUTTON
2. FUNCTION SWITCH (MODE / AUX / RADIO)
3. TUNING KNOB
4. BAND SWITCH (AM / FM / FM ST.)
5. CD/USB/SD
6. FOLDER
7. ENCODE
8. VOLUME + (MAX) BUTTON
9. VOLUME - (MIN) BUTTON
10. CD DOOR OPEN
11. STOP/SET
12. UP/HOUR
13. BASS BOOSTER SYSTEM ON / OFF
14. PROG/REPEAT
15. DN/MIN
16. PLAY/PAUSE
17. DISPLAY
18. USB CONNECTOR
19. SD/MMC CARD SLOT
20. HEADPHONE JACK
21. REMOTE CONTROL SENSOR

SIGN IN DISPLAY WINDOW

22. " CARD " shows when the disc being played is a SD/MMC card
23. " USB " shows when the disc being played is a USB
24. "CD" shows when the disc being played is a CD disc
25. "MP3" shows when the disc being played is a MP3 disc
26. "WMA" shows when the disc being played is a WMA disc
27. "STEREO" shows during FM STEREO in the radio mode
28. "ENC" indicated shows during record from CD Disc to USB or SD/MMC Card
29. "REP" shows during REPEAT1/ REPEAT ALL
30. " ▶ " indicated the PLAY MODE / " ❚❚ " indicated the PAUSE MODE of CD/MP3/WMA/USB/SD/MMC format
31. Number of Track Being Played
32. Radio Frequency
33. Radio Mode
34. "AUX " indicated show during the Auxilary Mode
35. "MUTE" shows when stop speakers sound temporarily during disc/radio playback
36. "FOLDER" indicated the FOLDER MODE of MP3/USB/SD format
37. "PROG" shows during progammming

BACK VIEW OF UNIT:

38. RIGHT AUXILIARY TERMINAL-R
39. LEFT AUXILIARY TERMINAL-L
40. RIGHT SPEAKER TERMINAL-R
41. LEFT SPEAKER TERMINAL-L
42. AC LINE CORD
43. FM WIRE ANTENNA

BACK VIEW OF SPEAKER:

44. RIGHT SPEAKER CORD
45. LEFT SPEAKER CORD

BOTTOM VIEW OF UNIT:

46. BATTERY COMPARTMENT

REMOTE CONTROL:

R1. POWER ON / STANDBY BUTTON
(To operate through Remote Control, the Power must be switched "ON" on the main unit)
R2. INFRARED SIGNAL TRANSMITTER
R3. STOP
R4. ⏮
R5. ⏭
R6. PLAY
R7. RANDOM
R8. INTRO
R9. CD/USB/SD
R10. PAUSE
R11. PROG
R12. REPEAT
R13. FOLDER
R14. MUTE
R15. NUMERIC KEYS
R16. VOLUME- BUTTON
R17. VOLUME+ BUTTON
R18. ENCODE

DANGER: Invisible laser radiation when open and inter-lock failed or defeated. Avoid direct posture to beam.

CAUTION: Hazardous laser radiation when open and interlock defeated.

CAUTION

RISK OF ELECTRIC SHOCK
DO NOT OPEN

"The apparatus shall not be exposed to dripping or splashing and that no objects filled with liquids, such as vases, shall be placed on the apparatus."

INSTALLATION
SPEAKER CONNECTION
Connect the RIGHT SPEAKER CORD (44) to the RIGHT SPEAKER TERMINAL-R (40) on the rear of the unit.
Connect the LEFT SPEAKER CORD (45) to the LEFT SPEAKER TERMINAL-L (41) on the rear of the unit.

INSERTING BATTERIES INTO THE REMOTE CONTROL
Install 2 x "AAA" size batteries according to the polarity diagram inside the battery compartment.

ANTENNA INFORMATION
AM – The AM antenna is inside the cabinet. Thus to get clear AM reception, place the cabinet with best position until the internal antenna picks up the strongest signal.
FM – To obtain better FM reception, lay out the FM WIRE ANTENNA (43) to it's full extent.

STEREO HEADPHONE JACK
For private listening, insert the plug of a stereo headphone(not included) to the STEREO HEADPHONE JACK (20) and adjust the Electronic Volume Knob VOLUME + (MAX) (8) button and VOLUME - (MIN) (9) button to the desired sound level. During the use of headphone, the sound from Speakers are automatically disconnected.

AUXILIARY INPUT JACK
For playing songs through the MP3 Player, connect the MP3 players to the AUXILIARY INPUT JACKS (38/39) in the front of the unit and position AUX for FUNCTION SWITCH (2).

TURNING ON/OFF THE UNIT
- Press down the POWER ON (1) button once to turn on the unit. The Backlight of LCD Display will light up.
- Press the POWER ON (1) button again to standby the system.

SETTING THE CLOCK TO THE TIME OF DAY
Press the TIME SET (11) button at the same time together with HOUR SET (12) button for hour setting or MINUTE SET (15) button for minute setting.
The Clock/Time will be shown on the LCD display under unit Standby mode. Once the AC current is being interrupted, the Clock/Time has to be reset.

BASS BOOSTER SYSTEM
Press the BBS (13) button to enhance bass effect.

VOLUME
Press and hold the Electronic Volume Knob VOLUME + (MAX) (8) button and VOLUME - (MIN) (9) button or through Remote Control (R16 / R17) to adjust the sound level.

CONTROL THROUGH THE REMOTE CONTROL

To enable the operation of the Remote Control, the INFRARED SIGNAL TRANSMITTER (R2) on the Remote Control must be pointed towards the REMOTE CONTROL SENSOR (15) on the main unit.

- Press the POWER ON/STANDBY (R1) button to Power On or Standby the system.
- Press the PLAY (R6) button to start playing the CD.
- Press the " ⏮ "(R4) or " ⏭ " (R5) button to skip to the previous or next track or press and hold the buttons to search within the track.
- Press the STOP (R3) button to stop the disc play.
- Press the PAUSE (R10) button during Play mode to temporarily stop the CD disc play.
- Press the PROG (R11) button to set the Program disc play (Please refer to the PROGRAMMED DISC PLAY).
- Press the NUMERIC KEYS (R15) to select the desired track.
- Press the REPEAT (R12) button to repeat Single track/ All tracks during disc play.
- Press the VOLUME- (R16) or VOLUME+ (R17) button to adjust the sound level.
- Press the MUTE (R14) to stop speakers sound temporarily during disc play.
- Press the CD/USB/SD (R9) button to switch between CD, USB or SD Playback during MODE.
- Press the RANDOM (R7) button to play the tracks randomly.
- Press the INTRO (R8) button to play the beginning (9 seconds) of each track on a CD and press it again to resume normal playback (Only for CD Playback).
- Press the FOLDER (R13) button to enable Folder mode.
- Press the ENCODE (R18) button to enable Encode(Record) Function.

OPERATION – USB, MP3, CD, CD-R, CD-RW

PLAYING COMPACT DISCS - GETTING STARTED

NOTE: Should skipping of tracks occur during CD playing, try turning the volume down. When CD is playing, do not open the CD Door.

1. Select FUNCTION SWITCH (2) to MODE.
2. Press the CD DOOR OPEN (10) button to open the CD DOOR. Put a CD into the CD COMPARTMENT and close the CD DOOR.
3. When the CD DOOR is closed with a CD inside, the total number of tracks of the disc will be shown on the LCD DISPLAY.
4. Press PLAY (16) button to start playing the CD and the number of track being played will be shown on the Display.
5. If the CD DOOR is not closed or there is no disc inside, the DISPLAY will show "OPN" or "NOD". If USB Flash or SD/MMC Card is connected, It will automatically start to playback the MP3 & WMA file in USB Flash or SD/MMC Card.

PLAYING COMPACT DISCS WITH MP3 - GETTING STARTED

NOTE: Should skipping of tracks occur during CD playing, try turning the volume down. When CD is playing, do not open the CD Door.

1. Select FUNCTION SWITCH (2) to MODE.
2. Press the CD DOOR OPEN (10) button to open the CD DOOR. Put a MP3 Disc into the CD COMPARTMENT and close the CD DOOR.
3. When the CD DOOR is closed with a MP3 Disc inside, the disc will be played automatically and the number of track being played will be shown on the display.
4. If the CD DOOR is not closed or there is no disc inside, the DISPLAY will show "OPN" or "NOD". If USB Flash or SD/MMC Card is connected, It will automatically start to playback the MP3 & WMA file in USB Flash or SD/MMC Card.

PLAYING USB, SD/MMC CARD - GETTING STARTED

PLAYBACK OF MP3 SONG VIA USB STORAGE MEDIA OR SD/MMC CARD

This system is able to decode and playback all MP3 & WMA files which stored in the memory media with USB connector, SD or MMC Card Slot.

NOTE: This is not possible to operate the USB/SD/MMC functions when the CD door is open. Make sure the CD door is closed during USB/SD/MMC playback

1. Select FUNCTION SWITCH (2) to MODE.
2. Before connecting the USB media to the unit, make sure the port is in correct direction and will connect. Or insert SD/MMC Card straightly without bending.
3. Then press CD/USB/SD (5) button.
4. The system will automatically start reading the MP3 & WMA files in the USB Storage Media, SD or MMC Card.

Wrongly connect the USB Storage Media or SD/MMC Card upside down could damage the unit or the USB Storage Media or SD/MMC Card.
A locked SD/MMC Card cannot detected or playback.

STOP DISC PLAY

- Press the STOP (11) button once to stop the disc play and the Play mode indicator will go out.

PAUSE DISC PLAY

- Press the PLAY/ PAUSE (16) button once during the Play mode to temporarily stop the disc play and switch to Pause mode. The disc will stop at the current play position. The track number will flash during Pause mode.
- Press the PLAY/ PAUSE (16) button again to resume disc play.

SKIP AND SEARCH MODE

- During Play or Pause mode, press the UP (12) or DN (15) button once to go to next track or previous track.
- During Play or Pause mode, press and hold the UP (12) or DN (15) button to search within a track and the elapsed time will be shown on the Display.
- Release the UP (12) or DN (15) button once the desired time is reached.

PROGRAM

IT IS NOT POSSIBLE TO ENTER PROGRAMS DURING DISC/USB/SD/MMC CARD PLAY. PRESS STOP (11) BUTTON FIRST, AND FOLLOWS THE FOLLOWING PROCEDURE:

- Press the PROG (14) button, the display will show "00" for CD and show "000" for MP3 , USB and SD.
- Then press UP (12) or DN (15) button to search for the track to be stored.
- Press the PROG (14) button to store the track.
- Continue entering tracks in this way until all the desired tracks are stored (up to a limit of 15 track).
- Press the PLAY/PAUSE (16) button once to start playing the first programmed track.
- During the playback of Programmed tracks, the PROG Indicator on the LCD display will remain lighted.

ENCODE (RECORD) MODE

IT IS NOT POSSIBLE TO ENCODE (RECORD) DURING STOP MODE OR NO STORAGE MEDIA (USB or SD/MMC) CONNECT WITH THE UNIT.

To Start Encode (Record) from CD Disc to USB or SD/MMC card, make sure the USB Flash player is TURN ON and also NOT in HOLD mode. While for the SD/MMC card, make sure the write protect tab is NOT in LOCK positiion.

SINGLE TRACK ENCODING

1. Select and Play the desired song.
2. When the desired song is being played, press and hold the ENCODE (7) button till the display showing “ENC”.(It will take about 3 sec)
3. To have the desired song successfully Encode (Record) to the Storage Media, do not interfere the unit until the completion of song playback.
   NOTE: The Play/Pause function is allow to carry on during Encoding (Recording). There will be no elapse of time stored into the Storage Media even PAUSE carried out.
4. In case the STOP (11) button is pressed during the Encode (Record) process, the song being Encoded (Recorded) to the Storage Media will also stop at the same time.

5. The Encoding (Recording) function will finish after the playback of a single song completed. To do the Encode (Record) function again, follow the above step 1 to step 4.
6. Please note the songs Encode (Record) into the Storage Media will stored inside folder name “MP3DIR” and each song will name from 1st song “ENC0001”, 2nd song “ENC0002”,……..

PROGRAM TRACK ENCODING

To have the desired songs Encode (Record) into the USB or SD/MMC, follow the PROGRAM procedure and store all the desired songs.Once the PROGRAM SONGS have started playing, press and hold the ENCODE (7) button till the display showing "ENC". All the PROGRAM SONGS will be played continuously and Encode (record) into the USB or SD/MMC. Please note that the PROGRAM SONGS will be played continuously and they will be Encoded at the same time until you press the STOP button or the end of sequence.

WHOLE CD ENCODING

To have a whole CD into the USB or SD/MMC, the single track encoding, press and hold the STOP (11) button untill the display showing "ALL". All the song in the CD disc will be played automatically and Encode (Record) into the USB or SD/MMC.

REPEAT MODE (FOR MP3 PLAYBACK AND USB STORAGE MEDIA PLAYBACK)

REPEAT 1 ON SINGLE TRACK

- To set REPEAT 1 (must be during the playback of CD/MP3/USB/SD storage media), press REPEAT (14) button once to play single track continuously. The REP indicator will remain lighted on the LCD display.
- To cancel Repeat 1, press REPEAT (14) button twice and the REP indicator will go off.

REPEAT ALL ON ALL TRACKS

- To set REPEAT ALL (must be during the playback of CD/MP3/USB storage media), press REPEAT (14) button twice to play whole Disc/USB storage media continuously. The REP ALL indicator will remain lighted on the LCD display.
- To cancel Repeat ALL, press REPEAT (14) button once more and the REP ALL indicator will go off.

REPEAT 1 SINGLE TRACK IN FOLDER

- To set REPEAT 1 on single track inside individual FOLDER, press FOLDER (6) button during play or stop mode. You can select the desire FOLDER by pressing UP (12) button and DN (15) button, the FOLDER indicator will remain lighted on the LCD display. Then press REPEAT (14) button once to play single track within FOLDER continuously, both FOLDER and REP indicators will remain lighted.
- To cancel Repeat 1 within FOLDER, press REPEAT (14) button twice and the REP indicator will go off.
- Or you can opt for Repeat 1 single track from current FOLDER to Repeat 1 single track from the whole Disc/USB storage media by pressing FOLDER (6) button once more time, FOLDER indicator will go off while REP indicator remain lighted.

REPEAT ALL TRACK IN FOLDER

- To set REPEAT ALL tracks inside individual FOLDER, press FOLDER (6) button during play or stop mode. You can select the desire FOLDER by pressing UP (12) button and DN (15) button, the FOLDER indicator will remain lighted on the LCD display. Then press REPEAT (14) button twice to play all tracks within current FOLDER continuously, both FOLDER and REP ALL indicators will remain lighted.
- To cancel Repeat ALL tracks within FOLDER, press REPEAT (14) button once more and the REP ALL indicator will go off.
- Or you can opt for Repeat ALL tracks from current FOLDER to Repeat ALL tracks from the whole Disc/USB storage media by pressing FOLDER (6) button once more time, FOLDER indicator will go off while REP ALL indicator remain lighted.

FOLDER MODE

- Press the FOLDER (6) button once during Play mode and the FOLDER indicator will remain lighted on the LCD display.
- Press the UP (12) or DN (15) button to switch between Folder on a disc or USB Storage Media until the desired Folder is selected.
- The number of Folder will be shown on the display for 2 seconds whenever the UP (12) or DN (15) button is pressed during Folder mode.
- The first track on the selected Folder will then be played and the position of the track being played inside the folder will be shown on the Display.
- Press the FOLDER (6) button once more to return to normal Play mode and the FOLDER indicator will go off.

NOTE: Under folder mode, the UP (12) or DN (15) button can only control folder UP or DN. To select next track or previous track, folder mode must be off.

- To play a track in the Folder, select the desired folder first and turn the FOLDER mode off by pressing the FOLDER (6) button once more.
- The position of the track being played in the whole disc will then be shown on the display.
- Then press the UP (12) or DN (15) button to the skip track until the desired track is selected.

LISTENING TO THE RADIO

- Press down POWER ON BUTTON (1) to turn on the unit and select the FUNCTION SWITCH (2) to RADIO. Select your desired radio band FM / FM STEREO / AM by the BAND SWITCH (4).
- Set the volume level by pressing the Electronic Volume Knob VOLUME + (MAX) (8) button or VOLUME - (MIN) (9) button to the desired sound level.
- Select your desired station with the TUNING control knob (3). The selected frequency will be shown on the Display (17).
- When finished listening, release the POWER ON (1) button to turn the radio Off.

GENERAL INFORMATION

CARE AND MAINTENANCE

Handle your compact discs carefully, and they can last a long time.

- Use a soft, clean cloth moistened with plain lukewarm water to clean the exterior of the unit.
- Never use slovents such as benzene or other strong chemical cleaners since these could damage the unit's finish.
- It is important that no liquid reaches the inside of the unit.
- This product shall not be exposed to dripping or splashing and that no objects filled with liquids, such as vases, shall be placed on the apparatus.
- Do not place the system in closed bookcases or racks without proper ventilation.
- The ventilation should not be impeded by covering the ventilation openings with items, such as newspapers, table-cloths, curtains, etc.
- No naked flame sources, such as lighted candles, should be placed on the product.
- Class I Laser Product
- If the cabinet becomes dusty, wipe it with a soft cloth. If the cabinet becomes smudged or dirty, clean it with a soft, slightly dampened cloth. Never allow water or any liquid to get inside the cabinet. Never use any abrasive cleaners or cleaning pads as these will damage the finish of your radio.
- Where the mains plug or an appliance coupler is used as the disconnect device, the disconnect device shall remain readily operable.

TIPS AND TROUBLESHOOTING

SYMPTOM	CAUSE / SOLUTION
Freezing / Problem occur during unit operation.	Should the unit Freeze or exhibit problem during operation, turn off the unit and disconnect the power supply and then restart again.
No Playback via USB Flash Player / USB / SD Card.	However due to the variance in the use of USB Flash Players software and capacity of the USB / SD Card, not all USB MP3 Players / USB / SD Card are compatible in the unit.
No Playback via USB Flash Player / USB / SD Card.	Due to the variance in MP3 or WMA transferring, some files may not be support.
Problem occur during playback of songs via USB / SD Card.	Should the unit exhibit problem via USB / SD Media, turn off the unit and disconnect the power supply and then restart again.
Not able to Encode (Record) to USB / SD Card	Should the memory in the USB / SD Media being used up, delete files and free up memory from Computer and do the Encoding (Recording) again. Make sure the write protect tab of SD Card is NOT in LOCK position. Make sure the USB Flash Player in TURN ON and NOT in HOLD position.